VT4889ADP

Full-Size Powered Three-Way High Directivity Line Array Element, Integrated Audio System

VT4889ADP-AN (Optional network input module)
VT4889ADP-CN (Optional network input module with digital audio)

VERTEC® DP Series

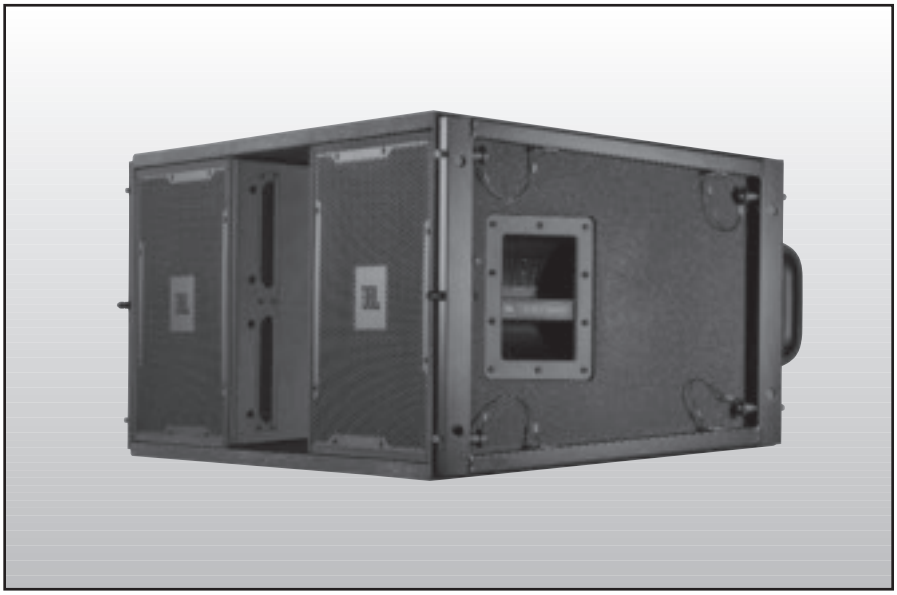

Application:

The VT4889ADP Full Size Powered Three-Way Line Array Element is designed to deliver high-quality reinforcement of music and speech in a variety of applications including concert audio, corporate A/V and theatrical presentations of all types for both portable users and performance venue installations.

Key Features:

- JBL DrivePack® DP-3 electronics package with robust high efficiency Class-I power
- Modular bay accepts standard dbx or optional Crown networked input modules
- World-wide AC line voltages automatically selected for 50 or 60 Hz
- Advanced technology components: Differential Drive®, Neodymium Magnet, Dual Voice Coil, Direct Cooled™ cone transducers for low weight and high output
- Industry's smallest, lightest, most powerful 1.5" exit, 3" diaphragm high frequency compression driver
- Proprietary waveguides couple to create precision HF vertical slot aperture
- Radiation Boundary Integrator® (RBI): Patented technology integrates output of individual bandpass elements
- JBL PlyMax® engineered wood materials provide rigid, yet lightweight enclosure
- Rugged DuraFlex™ exterior finish; weatherized loudspeaker cones
- Patented integrated S.A.F.E.™ suspension system with premium heat-treated alloys
- For use in stand-alone arrays or in combination with other VERTEC system models

The VT4889ADP is a versatile, powered lightweight 3-Way Line Array Element housing two 15" woofers, four 8" midrange radiators, and three high frequency compression drivers that combine to provide a high power-to-weight ratio. JBL DrivePack DP-3 power and DSP electronics package, developed in cooperation with Crown and dbx, includes patented high efficiency Class-I power amplifier technology and onboard digital signal processing that communicates readiness and operational status to the user, while monitoring fault detection of components and electronics. The VT4889ADP combines time-tested acoustical physics with JBL's innovative transducer research and design capabilities in a premium-grade integrated audio system package.

The PlyMax® enclosure features foam-backed perforated steel low-frequency grilles, dense protective foam inserts for midrange apertures, fine steel mesh grille to protect high-frequency apertures, and weather-resistant cones. Rugged DuraFlex™ exterior finish.

VERTEC suspension systems are engineered for maximum support strength and flexibility. The VT4889ADP's suspension hardware (same as used in the VT4880ADP powered subwoofer) relies on quick-release pins and end-mounted metal frames to couple adjacent units together in rigid arrays. Suspension frames are made from premium-grade chromoly alloy steel, with plated surfaces; hinge pins are plated and quick-release pin restraining lanyards are stainless steel to resist corrosion. Enclosure ships with integral front and rear hinge bar set (VT4889-RIG).

Available protective grille cover/wheel board and padded soft cover to ensure handy transport for rough road conditions, purchased separately as VT4889ADP-ACC.

Specifications:

Frequency Range (-10 dB):	40 Hz – 18 kHz
Frequency Response (±3 dB):	45 Hz – 16 kHz
Horizontal Coverage Angle (-6 dB):	90 deg. nominal (250 Hz – 16 kHz)
Vertical Coverage Angle (-6 dB):	Varies with array size and configuration
Maximum Peak Output[1]:	143 dB SPL, 1 m
Transducer Sections	
Low Frequency:	Two 2265H, 380 mm (15 in) dia., 76 mm (3 in) dual coil, neodymium Differential Drive®, Direct Cooled™
Bandpass Nominal Impedance:	4 ohms (LF woofers wired in parallel)
Mid Frequency:	Four 2169H, 203 mm (8 in) dia., 76 mm (3 in) dual coil, neodymium Differential Drive®, Direct Cooled™
Bandpass Nominal Impedance:	8 ohms (drivers wired in series-parallel)
High Frequency:	Three 2435H, 76 mm (3 in) diameter beryllium diaphragm, 38 mm (1.5 in) throat diameter neodymium compression drivers
Bandpass Nominal Impedance:	16 ohms (HF drivers wired in series)
System	
DP3 Internal Amplification Output (at load):	6000 W Peak, 3000 W Continuous
DP3 Output Topology:	3-Channel, Class-I
Signal Processing:	dbx Type IV Conversion System, 3-Way Precision bandpass filters, limiting, pre-equalization filters and automatic self-test functions
System Management:	DSP based limiters for mechanical and thermal protection
Signal Input:	F-XLR Active 20k Ohms Balanced, 10k Ohms Unbalanced
Signal Loop-Through:	M-XLR (passive pass-through)
Controls:	Precision 0.5 dB increment 16 dB input attenuator (DPIP only)
AC Power Operating Range:	Auto Select 90-132/VAC 50/60 Hz
AC Line Voltage:	50/60 Hz, Auto-Detect; 120V/240V (-15%, +10%)
AC Input Connector: AC Power Loop-thru:	Neutrik PowerCon (NAC3MPA) Neutrik PowerCon (NAC3MPB)
AC Current Requirement:	6A per system at 120V, 3A per system at 240V
Enclosure	
Box Construction:	Wedge frustum 5 degree side angle enclosure. PlyMax® engineered wood composite structure, DuraFlex finish, 8 handles
Suspension System:	Patented S.A.F.E.™ hardware, integral hinge bars nest in suspension frames on enclosure sides. Quick release pins with restraining lanyards. Set of 4 hinge bars included. Suspend with VT4889-AF or VT4889-SF Array Frame.
Grille:	Separate LF and HF, black perforated steel. LF grilles foam backed
Dimensions (W x H x D):	1215 mm x 494 mm x 692 mm (47.8 in x 19.4 in x 27.2 in)
Net Weight:	93.1 kg (205 lb)
Shipping Weight:	106.7 kg (235 lb)

[1]Measured maximum SPL in Free Field conditions with IEC shaped noise.

JBL continually engages in research related to product improvement. Some materials, production methods and design refinements are introduced into existing products without notice as a routine expression of that philosophy. For this reason, any current JBL product may differ in some respect from its published description, but will always equal or exceed the original design specifications unless otherwise stated.

INPUT MODULE CHARACTERISTICS AND OPTIONS

Features

Description	DPIP (standard input module)	DPAN (optional HiQnet network input module)	DPCN (optional HiQnet network input module; digital audio)
HiQNet Compliant	No	Yes	Yes
Network Communication	No	100MB Ethernet	100MB Ethernet
Network Connections	N/A	RJ-45, CAT5	RJ-45, CAT5
Supported Audio format	Analog	Analog	Digital with analog backup
CobraNet™ digital audio over ethernet	No	No	Yes
Level Controls	Attenuator, 16 dB range	Network Controllable	Network Controllable
Remote Load Monitoring	No	Yes	Yes
User Assignable Filters	No	16	16
User Assignable Filter Types	None	9	9
User Accessible Delays	No	Yes	Yes
Noise Generator	No	Pink, White	Pink, White
Sine Wave Generator	No	Continous, Burst	Continuous, Burst
Error Reporting	No	Yes, via software	Yes, via software
Digital Speaker Setting Presets	2, fixed	10, user assignable	10, user assignable
Polarity Reverse	No	Yes, via software	Yes, via software
Listen Bus line level remote monitor	No	No	Yes
Firmware upgrades via network	No	Yes	Yes
Mute	No	Remote via network	Remote via Network

Specifications

Analog Audio Input Connectors	XLR, female	XLR, female	XLR, female
Input Type	Electronically Balanced, RF Filtered		
Signal Loop-through	XLR, male, passive pass-through		
Input Impedance	20k Ohms Balanced		
Polarity	(+) voltage on XLR pin 2 yields (+) LF pressure		
Max Input Level	+23 dBu		
Frequency Response	20 Hz – 20k Hz ± 0.5 dB		
DSP Processing	dbx Type IV analog-to-digital conversion circuitry	24 Bit conversion, 32 bit floating point processing	24 Bit conversion, 32 bit floating point processing
Latency	n/a	0.625 mS	0.625 mS + 5.333 mS
Dynamic Range (20-20 KHz)	> 107 dB (A Weighted)	> 105 dB (A Weighted)	> 103 dB (A Weighted)
THD+N (20-20 KHz), rated power	< 0.05%		
Crosstalk	> 110 dB, 120 dB typical	> 60 dB @ 1 kHz	> 60 dB @ 1 kHz
User Programmable Signal Delay	N/A	> 2 seconds	> 2 seconds
Rear Panel Controls	Gain, Sub Filter Enable	Enable ALT Preset	Enable ALT Preset
Rear Panel Indicators	Signal/clip, ready, thermal, fault, sub filter on/off	Signal/clip, ready, thermal, fault, alt. preset select, Network: activity, link	Signal/clip, ready, thermal, fault, alt. preset select, Network: activity, link, CobraNet™ conductor

JBL DrivePack® Software Device Panel

With optional HiQnet-compatible input modules installed, JBL DrivePack systems can be remotely controlled and monitored using *HiQnet System Architect*™ software. A Windows-based application, it provides an intuitive, unified platform for system configuration and operation of not only JBL DrivePack-equipped systems, but any other HiQnet-compliant audio devices in the signal chain, like the VP (Venue Performance) Series. *HiQnet System Architect* enables the unified layout of on-screen product control surfaces, and simple preset configuration of an entire system made up of HiQnet-compliant products across multiple brands and product classes.

Advanced remote control and diagnostic capabilities, custom control panel creation, unified event logging and error reporting for the entire system, and the recall of presets on all connected HiQnet devices are included. In addition, the application enables a user to copy / paste like parameter values from, and to, multiple products across the HiQnet network.

Use with current version of *HiQnet System Architect* network configuration and control software, available for download at www.harmanpro.com.

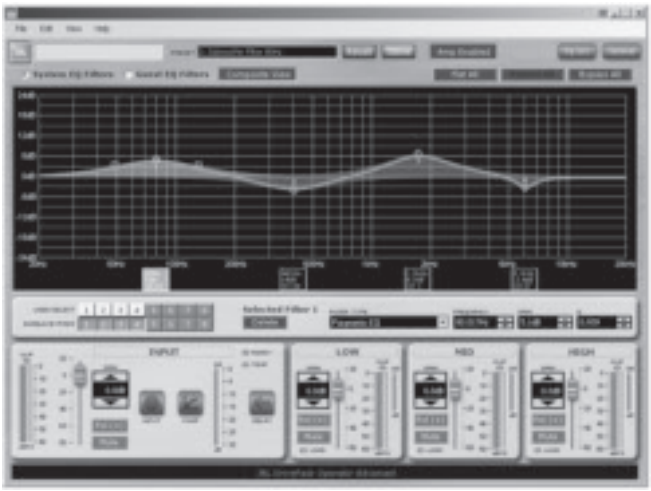

JBL DrivePack® enclosures are equipped with a modular input bay that accepts either DPIP, DPAN or DPCN input modules. Speaker-dependent processing such as crossover filtering and component equalization, time alignment and protection are not user-configurable, however, the following options are available for connectivity, audio signal path and control functionality for respective input modules:

DPIP (Standard dbx Input Module)

The standard DPIP input module features analog audio inputs and sophisticated onboard digital signal processing technology. Precision bandpass filtering, limiting, time alignment, component equalization and automatic self-test functions ensure optimized performance. Rear panel controls include a 32-position detented rotary attenuator calibrated in 0.5 dB steps, providing a 16 dB range of control. The "Enable Subwoofer Filter" button is a momentary-contact switch that enables or disables an 80 Hz filter. For subwoofer systems, the low-pass frequency is set to 80 Hz when selected or 100 Hz when deselected. For full-range systems, the high-pass frequency is raised to 80 Hz when the "Enable Subwoofer Filter" button is selected.

DPAN (Optional HiQnet Network Input Module with Analog Audio)

In addition to features included on the standard DPIP input module, the optional DPAN module adds 100 Mb Ethernet networking functionality, thus allowing for Remote Control and Monitoring via HiQnet System Architect™ software. Available monitoring functions include: input signal level, clip and gain reduction; ready / temp status; individual channel load status, signal level, clip and gain reduction; event logging and user alert messaging. Available remote control functions include: input level, polarity and mute; input compressor attack/release, ratio and makeup gain; individual channel gain and mute. Sixteen, type-selectable input filters (8 System and 8 Guest filters) are available for system equalization along with user-adjustable input delay of up to 2 seconds and sub filter access (user-adjustable low pass filter for subwoofer systems; high pass filter for full-range systems). Signal generator functions (sine wave, pink noise) are available to facilitate system testing and up to ten presets can be stored internally. In addition, Master Control Panels and Master Monitor Panels allow for convenient grouping of control and monitoring functions for multiple DPAN-equipped DrivePack enclosures, providing a powerful control/monitoring interface for large format line array or subwoofer systems.

HiQnet™

DPCN (Optional HiQnet Network Input Module with Analog Audio)

In addition to features included on the DPAN input module, the optional DPCN module adds CobraNet™ digital audio input capability. The DPCN module provides the ability to direct up to 64 digital audio channels on one network with digital audio plus remote control and monitoring combined on a single Ethernet cable. Flexible input source selection via HiQnet System Architect allows for operation using either Analog, CobraNet, CobraNet with Analog Backup or CobraNet with Analog Override input signals, providing complete reliability and flexibility to cover any situation. HiQnet System Architect provides the software user interface with the same powerful, networked Remote Control and Monitoring functionality as described above for the DPAN input module.

HiQnet™

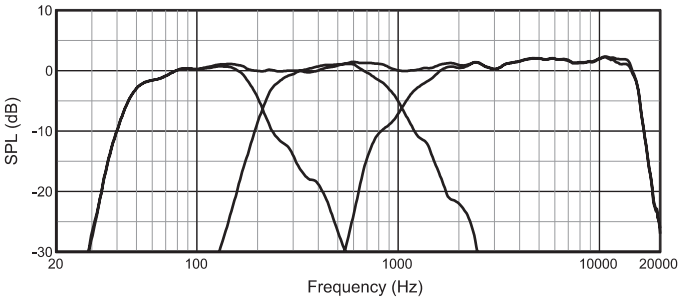

Normalized Frequency Response
(Individual bandpasses with composite overlay)

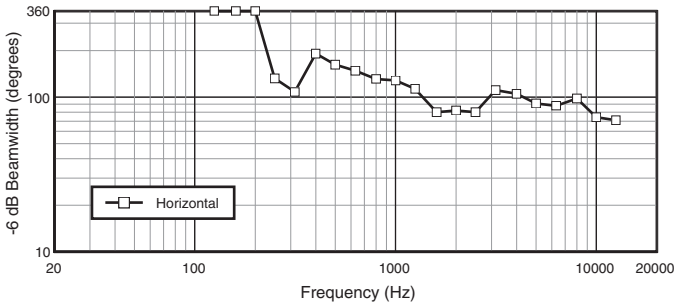

Horizontal Beamwidth, Single Element and Typical Array

VT4889ADP Acoustical Measurements

The frequency response measurement shows individual bandpass responses with composite response overlay. The Vertical Beamwidth results range from a single box up to an 8-box array with 10° splay angles between adjacent array elements.

All measurements provided herewith are derived from data gathered with a calibrated measurement microphone centered on-axis of the box or array, with polar data points taken symmetrically around the measurement axis.

All polars were taken as groundplane measurements at a distance of 20 meters, with data gathered on 5-degree intervals from 0-355° using the MLSSA measurement system.

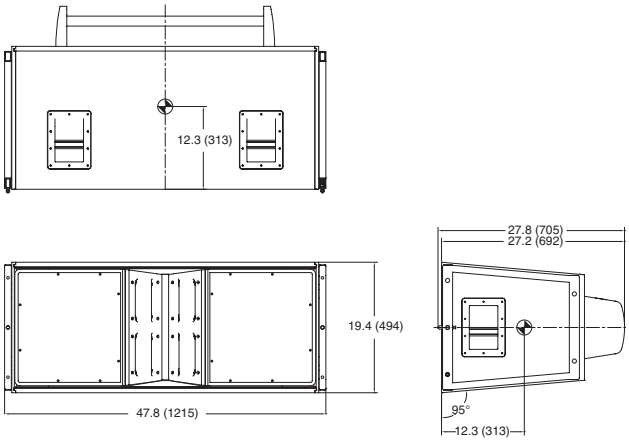

System Dimensions (WxHxD): 1215 mm x 494 mm x 692 mm
Including attached suspension hardware

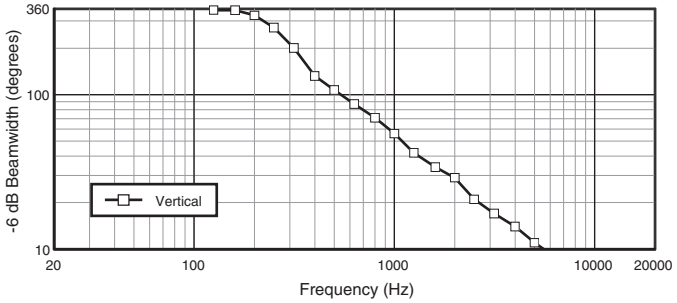

Vertical Beamwidth, Single Line Array Element

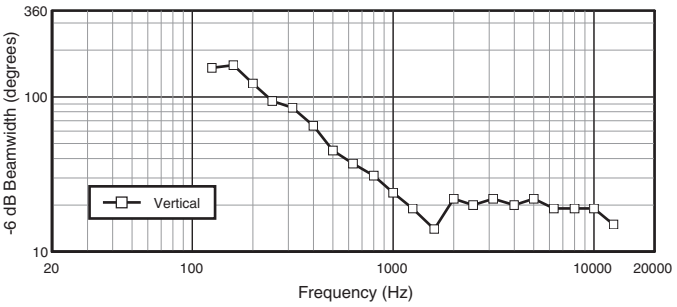

Vertical Beamwidth, Two Element Array
(10° splay between cabinets)

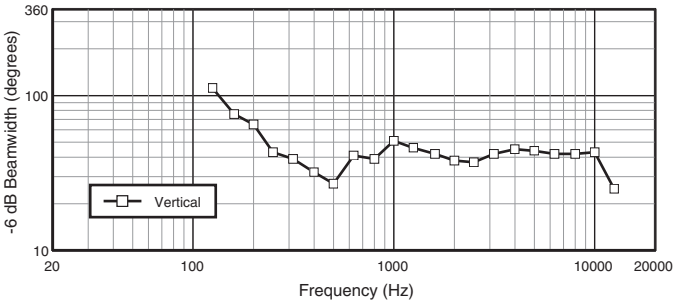

Vertical Beamwidth, Four Element Array
(10° splay between cabinets)

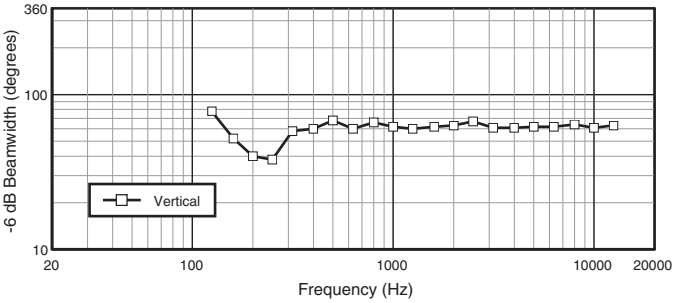

Vertical Beamwidth, Six Element Array
(10° splay between cabinets)

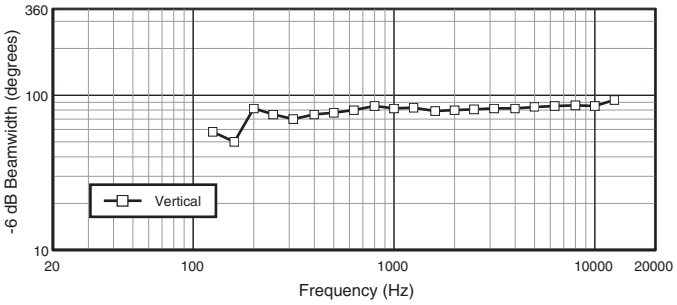

Vertical Beamwidth, Eight Element Array
(10° splay between cabinets)

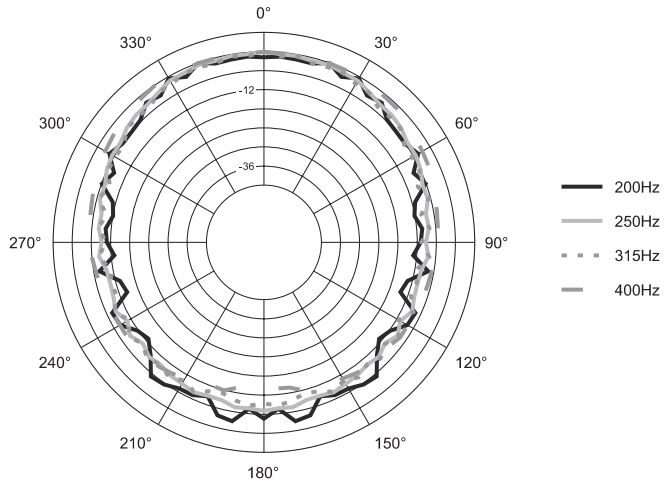

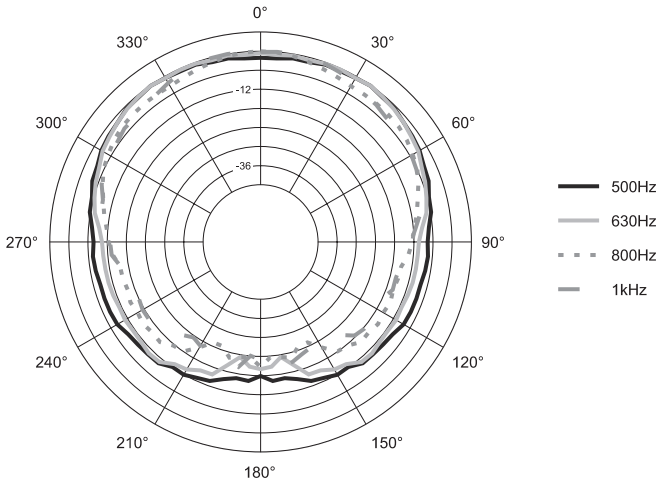

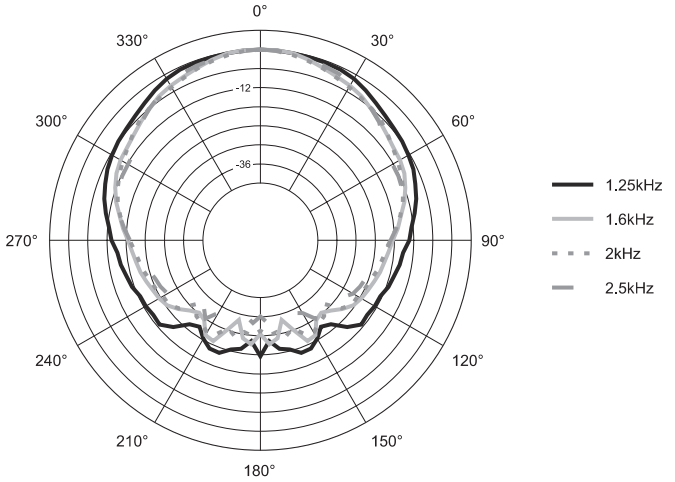

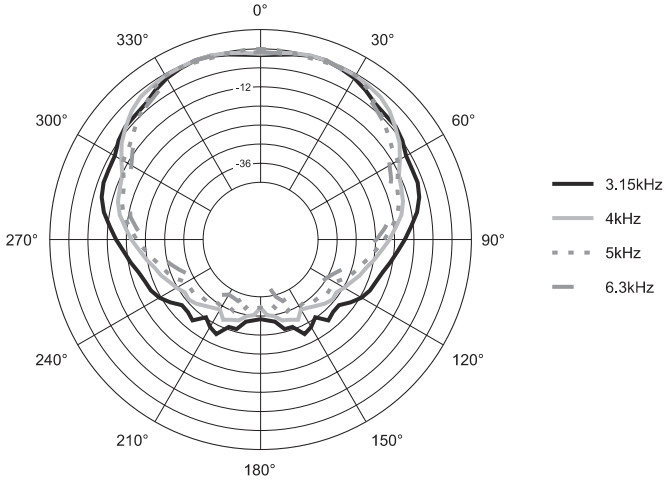

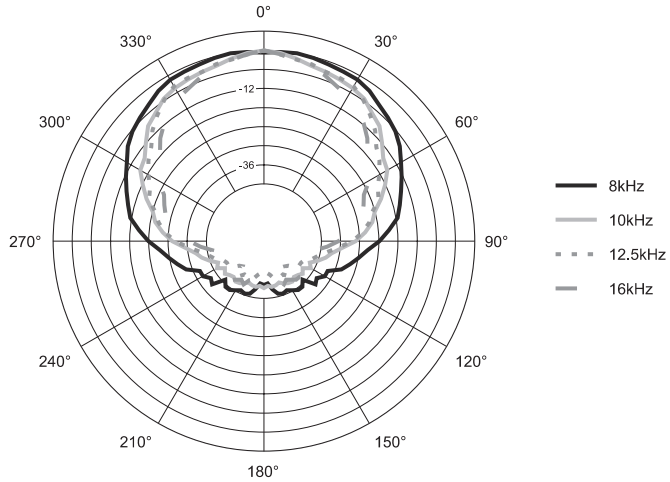

Horizontal 1/3 Octave Polars (Single VT4889ADP Array Element)

Data taken as groundplane measurements at a distance of 20 meters, gathered on 5-degree intervals from 0-355° using the MLSSA measurement system.

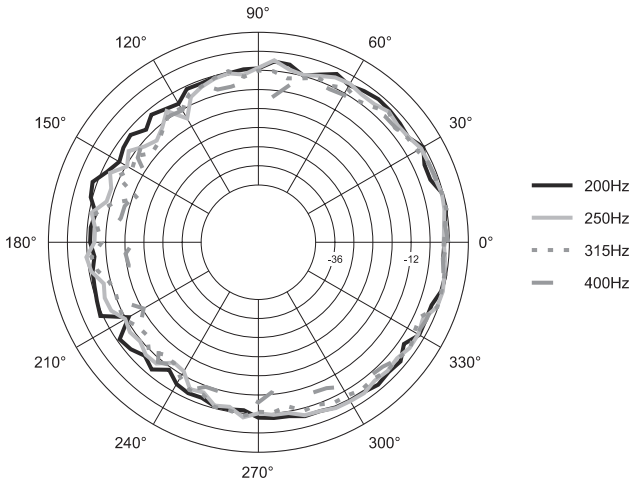

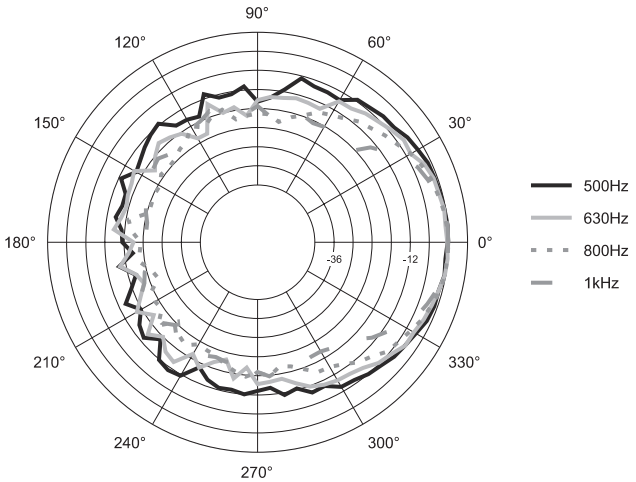

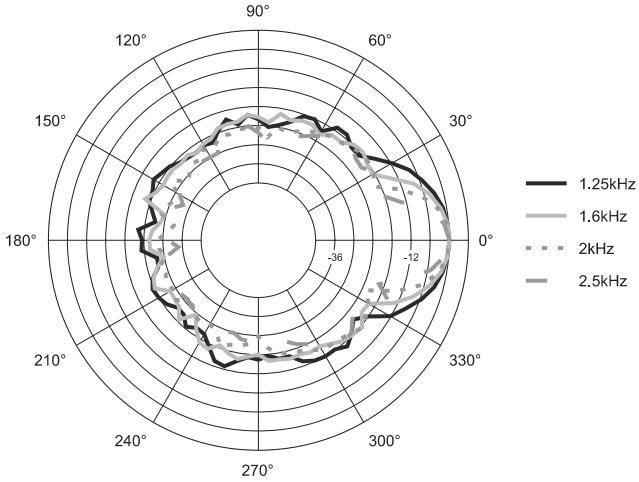

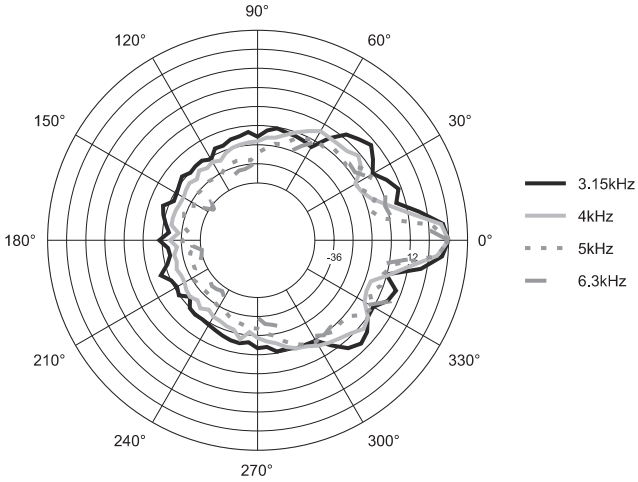

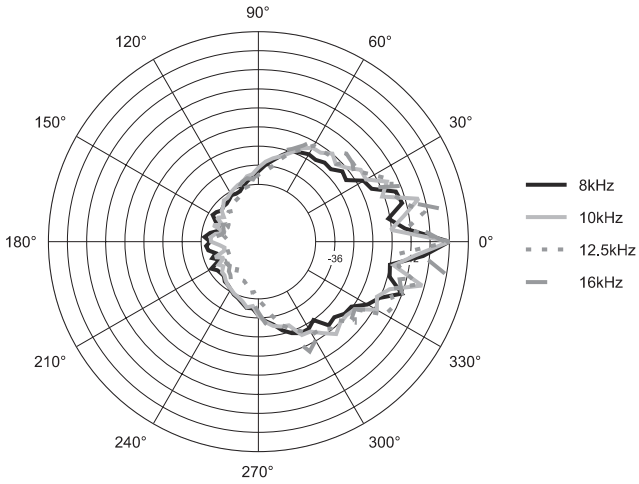

Vertical 1/3 Octave Polars (Single VT4889ADP Array Element)

Data taken as groundplane measurements at a distance of 20 meters, gathered on 5-degree intervals from 0-355° using the MLSSA measurement system.

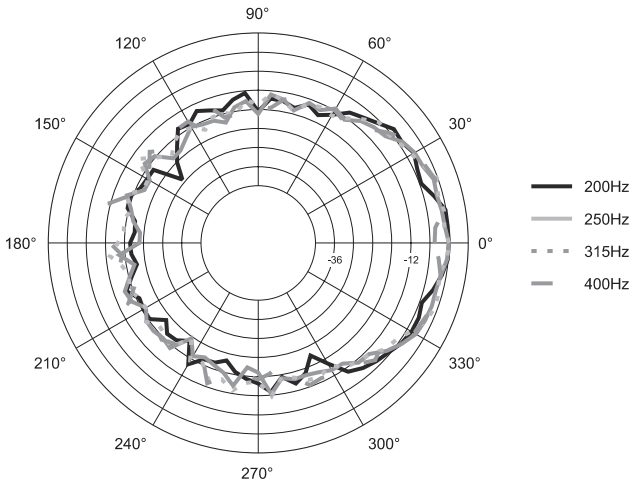

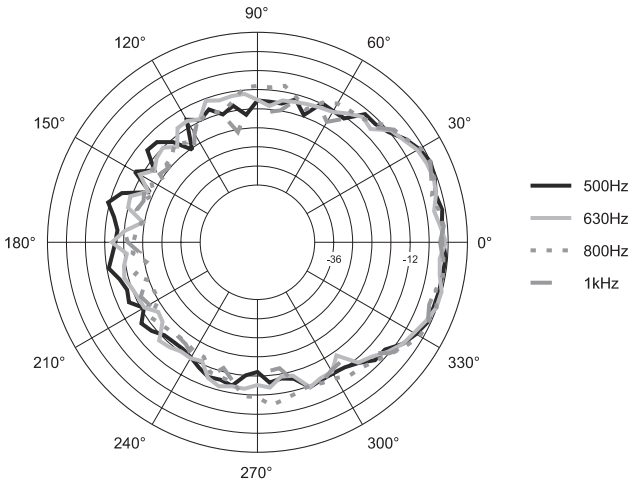

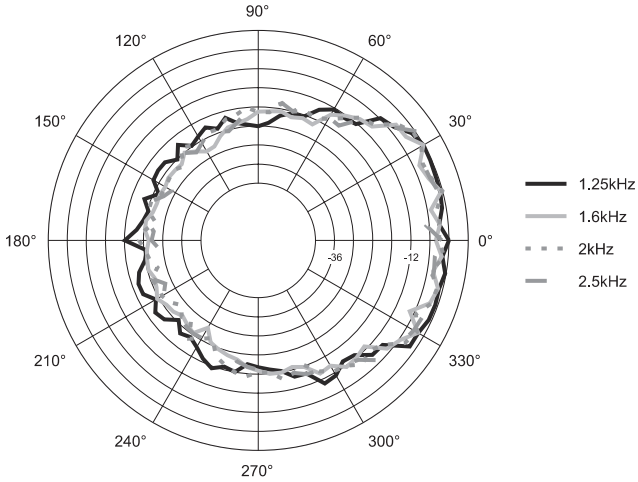

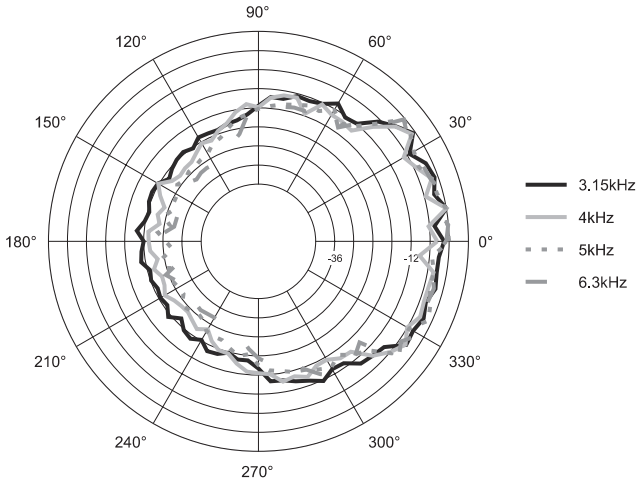

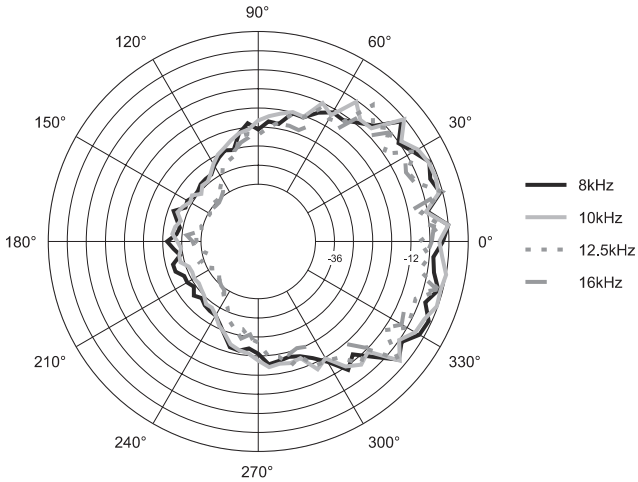

Vertical 1/3 Octave Polars (8-Box Array of VT4889ADP Enclosures)

Data taken as groundplane measurements at a distance of 20 meters, gathered on 5-degree intervals from 0-355° using the MLSSA measurement system.

VERTEC System Arrays

The VT4889ADP is an Articulating Line Array™ element designed for use in vertically-oriented, multi-box systems. A nominal horizontal coverage pattern of 90° is maintained, while setting the individual box angles allows the creation of arrays with varying vertical coverage angles. Vertical coverage of an array is a function of the number of boxes used and the splay angles chosen.

VT4889ADP enclosures can be suspended from VT4889-AF or VT4889-SF array frames. Due to the use of JBL's patented S.A.F.E.™ suspension hardware system, rigid arrays can be constructed that can be tilted either upwards or downwards at radical angles. Front hinge bars are tightly coupled, while rear hinge bars are used to set angles from zero to ten degrees for adjacent enclosures. No "gaps" appear on the array's front baffle due to trapezoidal box shape. No "straps" are required on the rear of the array.

The JBL DrivePack DP-3 is attached to the back panel of a modified VT4889-1, creating the model VT4889ADP. Robust Crown amplification and onboard digital signal processing are combined to create a compact, powerful integrated audio system.

VT4889-AF (Array Frame)

This array suspension frame is crafted of 6061 heat-treated aluminum and includes 11 (eleven) shackle attachment holes, set on 4" centers. Each hole has an I.D. (inner diameter) of 1" (25.4 mm) and is fitted with bronze bushings for long life. Fitted with SAE Grade 8 bolts, 7075 Grade aluminum receiver blocks and steel quick release pins with stainless steel restraining lanyards. The VT4889-AF can also be used to ground stack up to 6 (six) enclosures. Weight: 100 lbs (45 kg).

VT4889-SF (Short Frame)

This array suspension frame is crafted in similar fashion to the VT4889-AF. The VT4889-AF is primarily intended for use with smaller clusters or distributed satellite arrays. Optional anchor for use on bottom of large arrays. Can also be used to ground stack up to 4 enclosures. Weight: 52 lbs. (24 kg).

VT4889-RIG

VT4889-RIG comprises a set of four separate hinge bars for the VT4889ADP, two each of the front hinge bar and two each of the longer rear hinge bar. Crafted of premium-grade chromoly steel alloy with plated hinge pins, ships with product. Weight: 9.5 lbs. (4.3 kg).

VT4889ADP-ACC

The VT4889ADP-ACC includes items necessary for the proper transport and protection of one VT4889ADP. The accessory kit includes: (1) VT4889-Dolly and (1) VT4889ADP-Cover with rigid foam blocks and protective metal plates for DrivePack.

Important Note: The VT4889ADP-ACC is sold as a separate item. One kit should be ordered with each VT4889ADP to ensure safe and reliable transport of each system in portable use.

JBL Professional
8500 Balboa Boulevard, P.O. Box 2200
Northridge, California 91329 U.S.A.
A Harman International Company

© Copyright 2008 JBL Professional

SSVT4889ADP
CRP 5M
03/08